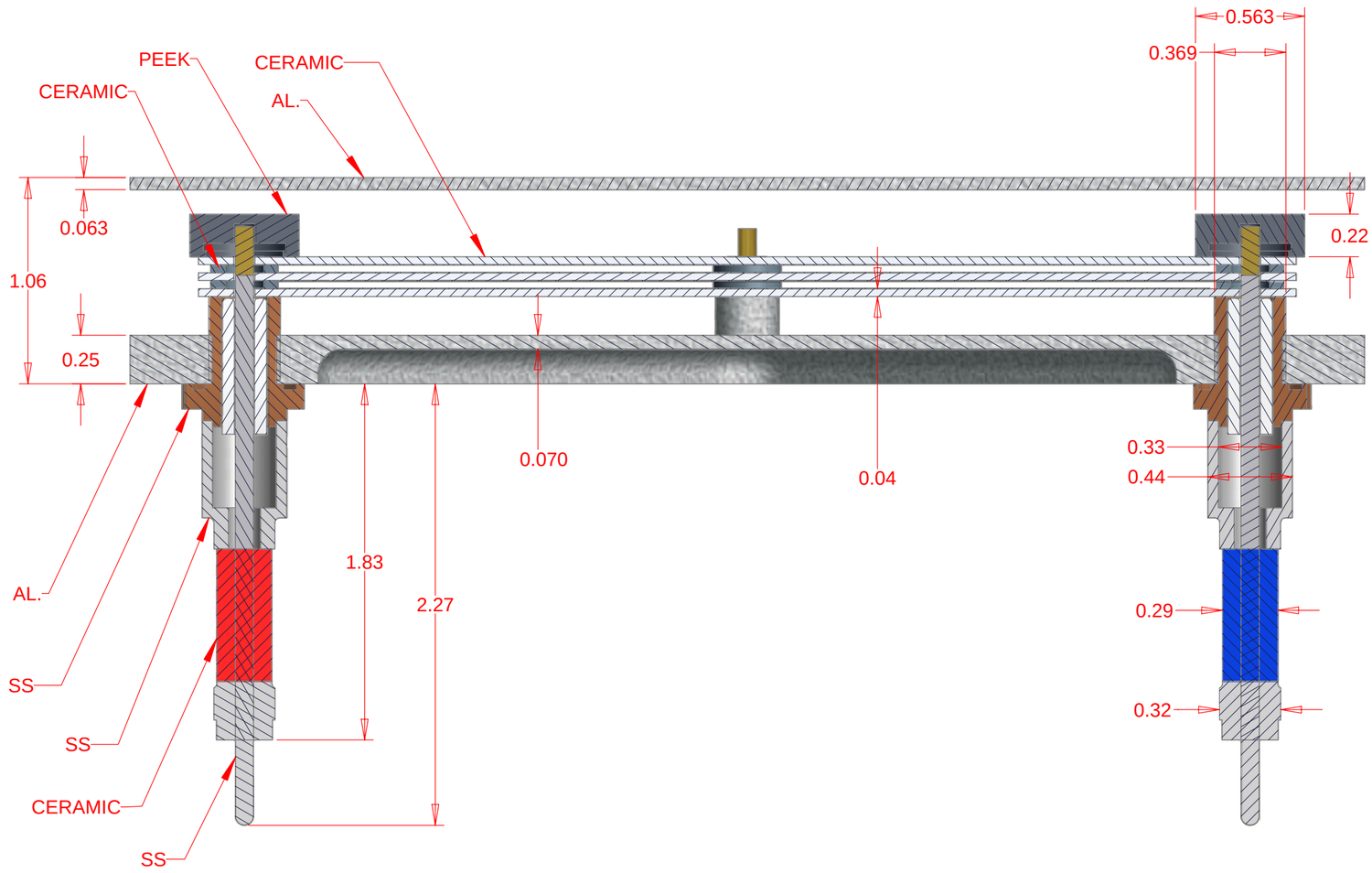

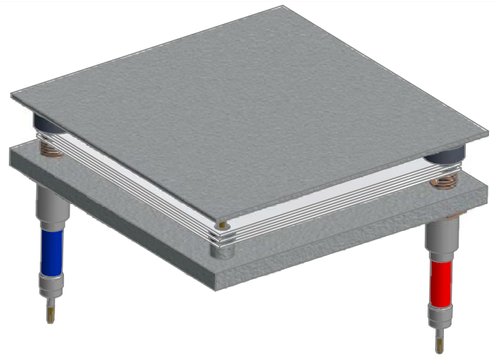

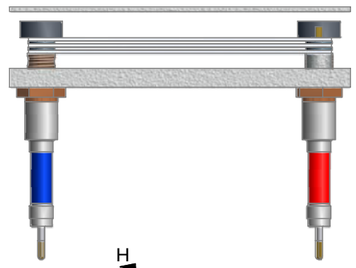

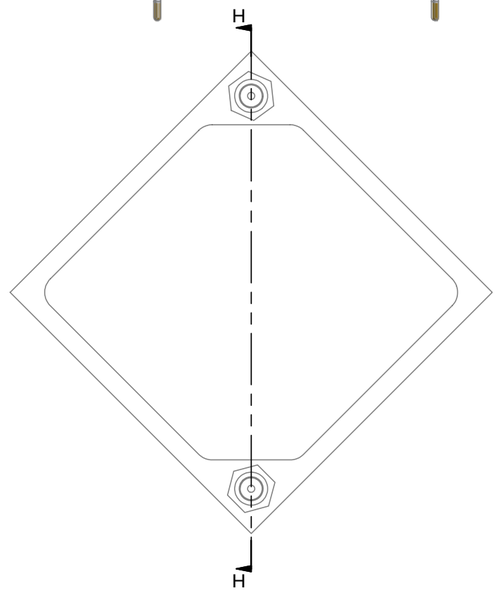

DRAWN Marek Proga	8/25/2010	UNIVERSITY of TEXAS at AUSTIN HIGH ENERGY PHYSICS
Phone: 232 - 7189	PROJECT	TITLE HM CROSS SECTION THRUGH FIEDTROUGH
DESIGN Marek Proga	NUMI	
PROFESSOR Dr. SACHA KOPP		SIZE D / DWG NO HM 878 / PART NO / REV 1
		SCALE / SHEET 1 OF 1
		REV. DATE :

PATH: E:\INVENTOR PROJECTS\Hadron Monitor - New\3 plates monitor\Drawings\HM_878_Body-Mass.idw