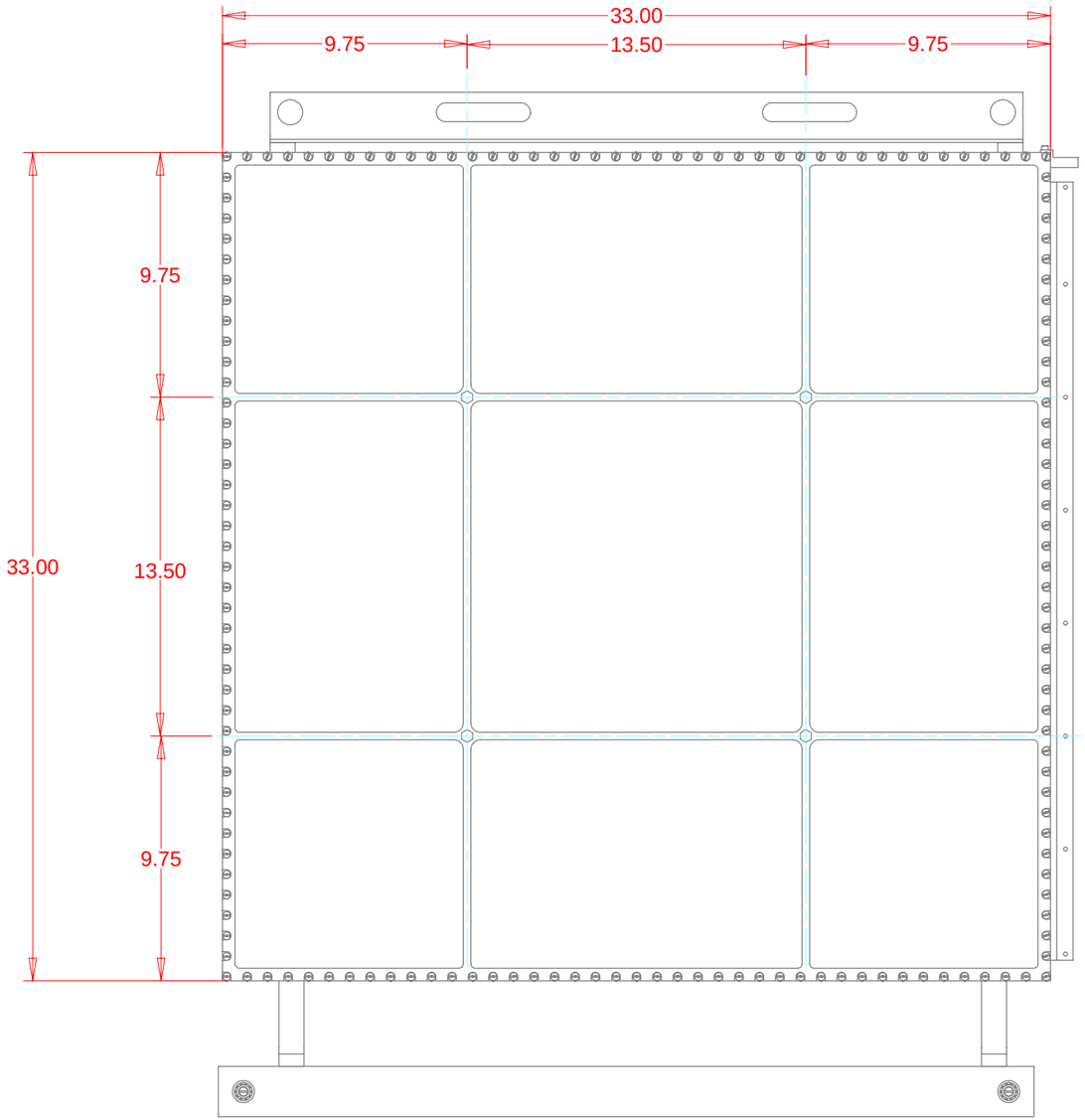

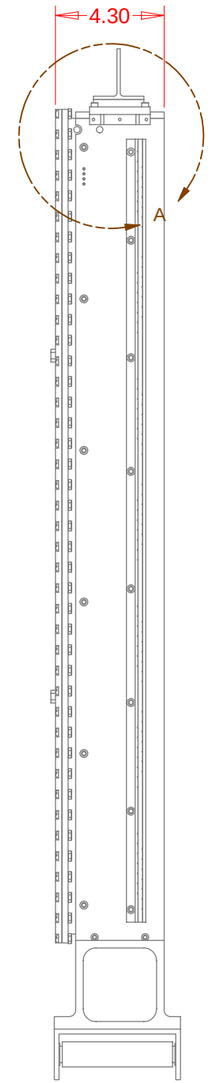

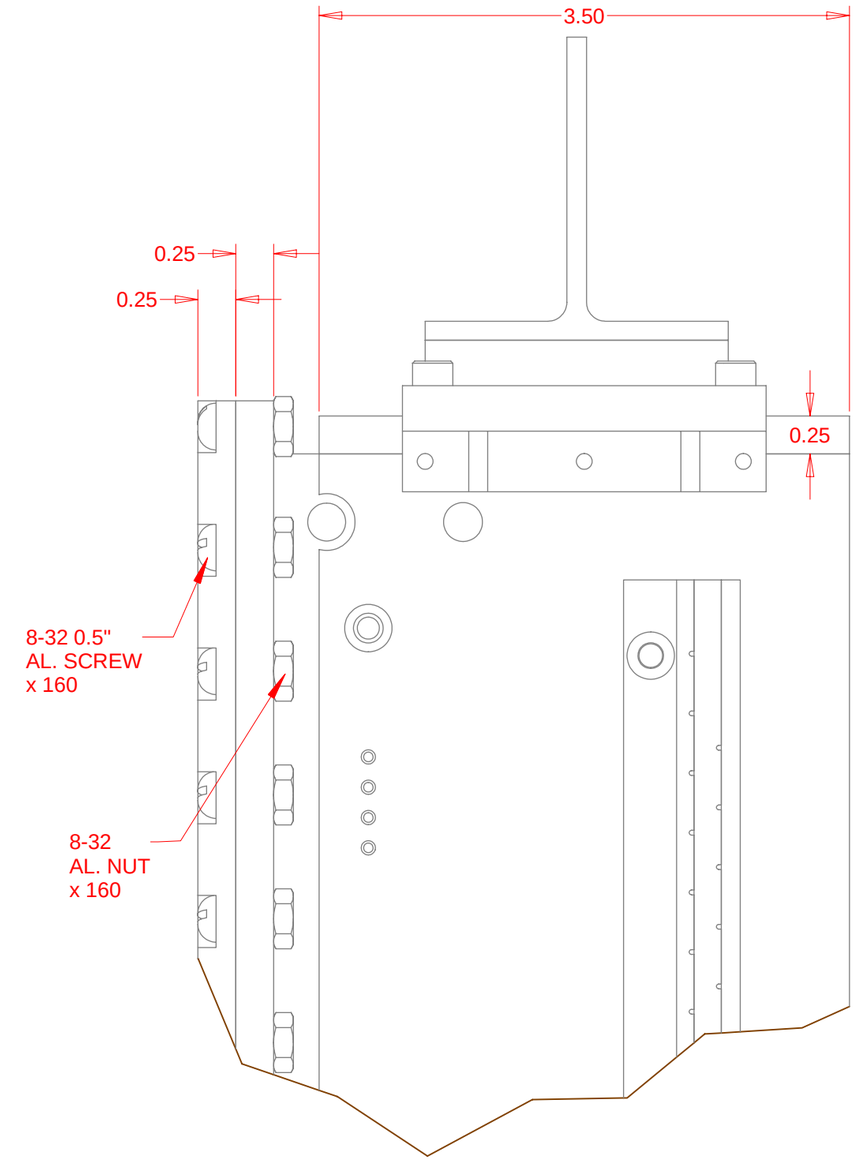

DETAIL A
SCALE 2 : 1

DRAWN Marek Proga	8/25/2010	UNIVERSITY of TEXAS at AUSTIN HIGH ENERGY PHYSICS
Phone: 232 - 7189	PROJECT	TITLE
DESIGN Marek Proga	NUMI	HM MASS -1
		SIZE D / DWG NO HM_875 / PART NO / REV 1
PROFESSOR Dr. SACHA KOPP		SCALE / SHEET 1 OF 1
		REV. DATE :

PATH: E:\INVENTOR PROJECTS\Hadron Monitor - New\3 plates monitor\Drawings\HM_875_Body-Mass.idw